InterLAN-EI.8P

EASY-I.8P

Industrial Over IP audio intercom with 8 function pushbutton

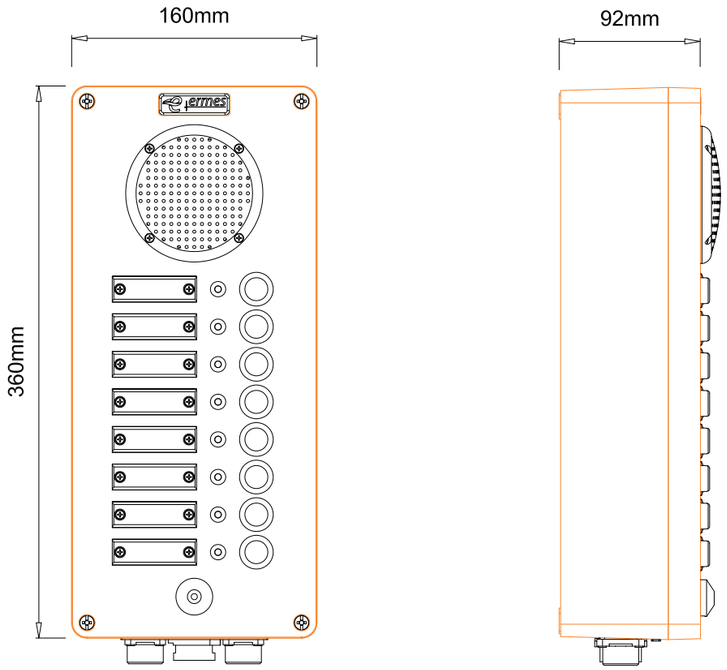

Dimensions

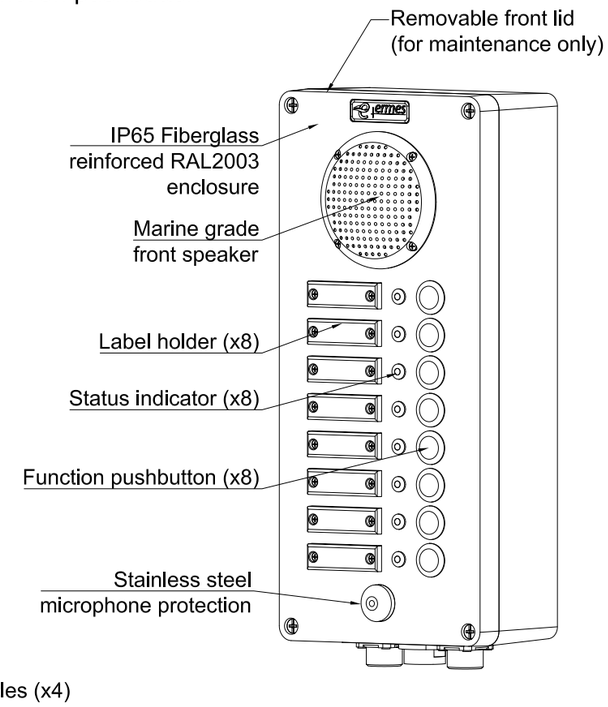

Description

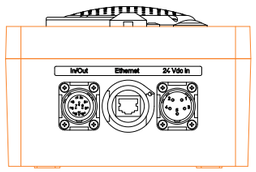

In/Out

	In/Out 12 female socket
1	In 1a
2	In 1b
3	In 2a
4	In 2b
5	Out 1a
6	Out 1b
7	Out 2a
8	Out 2b
9	Reserved
10	Reserved
11	Reserved
12	Reserved

Ethernet

	Ethernet RJ45 IEE802.3 (100Base-T)	Wire
1	White/orange	STP CAT5ethernet cable (or upper) (4X2X2XAWG22 RJ45)
2	Orange	
3	White/green	
4	Blue	
5	White/Blue	
6	Green	
7	White/Brown	
8	Brown	

24Vdc In

	24 Vdc in 5 male socket	Wire
1	+24V@10W	1x1,5
2	0V	1x1,5
3	reserved	
4	reserved	
5	earth	1x1,5

Connections

Connection diagram

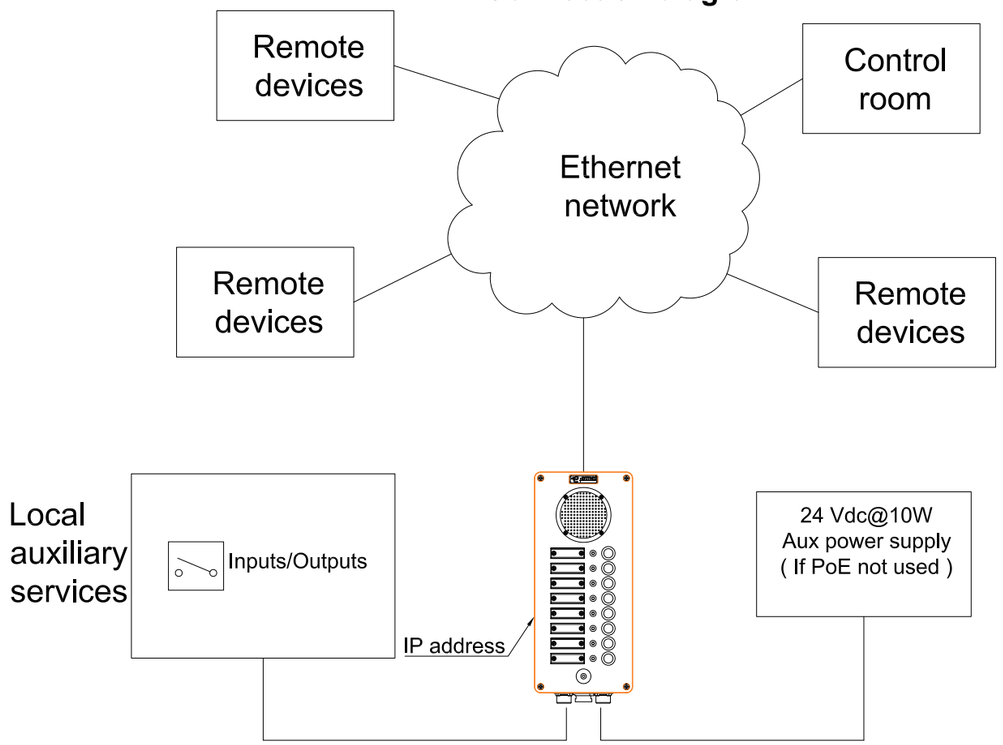

ermes
Ermes elettronica Srl
Via Treviso 36 31020 S.Vendemiano - TV ITALY
www.ermes-cctv.com

Disegnato / Drawn by	Controllato / Checked by	Approvato / Approved by	Descrizione / Title	Nome file / File name	Codice documento / Document code:	Data / Date	Rev. n°	Nota di revisione / Revision note:
Liessi	Liessi	Gambino	Industrial Over IP intercom with 8 function pushbutton	FTWG-EASY-I.8P-0.dwg	FTWG-EASY-I.8P-0	29/05/2020	0	Emissione